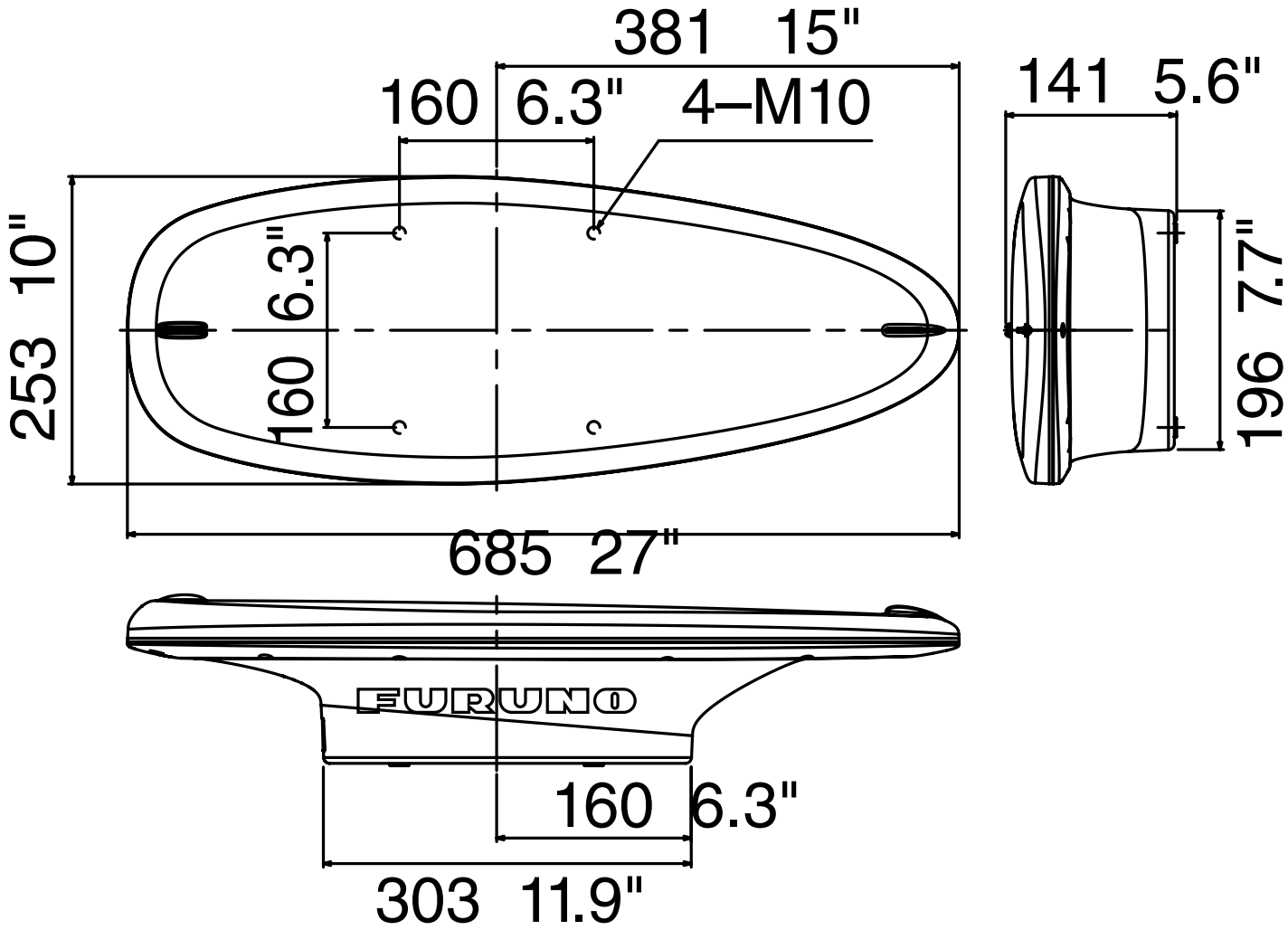SC30 Sensor Unit 2.5 kg 5.5 lb